Realtek Switch IC Roadmap

2022.Q4

Realtek Confidential

© 2021 Realtek Semiconductor Corp. All rights reserved

Switch Product Portfolio

25~100G Aggregation Carrier Edge

- RTL 9330 Series — Aggregation, Production 2023
- RTL 9350 Series — Data Center Core, Production 2025

GE/mG +10G Aggregation

- RTL 930x Series — L3-Lite Managed, MP 2018 Q1
- RTL 931x Series — Full L3 Managed, MP 2019 Q1
- RTL 9311BR — Next SMB/SME, Production 2022
- RTL 9320 Series — Aggregation, Production 2024

FE+GE Access SMB/SME

- RTL 833x Series — L2/L2+ Smart, MP 2013 Q1
- RTL 835x Series — L2/L2+ Smart, MP 2013 Q3

GE+GE Access SMB/SME

- RTL 838x Series — L2/L2+ Smart, MP 2013 Q1
- RTL 839x Series — L2/L2+ Smart, MP 2013 Q3

FE Dumb SMB/SME

- RTL 8305x Series — 5 Port, MP 2010 Q1
- RTL 8309x Series — 8 Port, MP 2010 Q3
- RTL 8316E /8324E — 16/24 Port, MP 2011 Q3

GE Dumb SMB/SME

- RTL 8367x Series — 5 Port, MP 2011 Q1
- RTL 8370x Series — 8 Port, MP 2012 Q3
- RTL 8382L — 16/24 Port, MP 2013 Q3

PSE

- RTL 8239 — 4 Port bt, MP 2020 Q4
- RTL 8238B — 8 Port af/at, MP 2020 Q4

Realtek Confidential

© 2021 Realtek Semiconductor Corp. All rights reserved

Switch Chip Roadmap

Overview

- IEEE802.3bt
- 2.5G unManaged Switch
- mG Access Managed Switch
- 1G Access Managed Switch

IEEE802.3bt

RTL8238B
RTL8239B

RTL8238B/39B
- 8-Port AT
- 4-port BT

IEEE802.3bt

RTL8238B
RTL8239B

RTL8238B-VB/39B-VB
- 8-Port AT
- 4-port BT

IEEE802.3bt

RTL8238B
RTL8239B

RTL8238B-VC/39B-VC
- 8-Port AT
- 4-port BT
- MP Q2'23

IEEE802.3bt

RTL8238B
RTL8239B

RTL8234AT
- 4-Port AT
- 4-port BT
- MP Q4'24

2.5G unMngd

RTL8371

RTL8371
- 30G
- 8 Port 2.5G
- **40nm**

2.5G unMngd

RTL8373

RTL 8373/8372
- 30G 8/5 Port 2.5G
- **Build-in Quad 2.5G PHY**
- **ES Q2'22**
- **MP Q4'22**
- **22nm**

mG-Access

RTL931x

RTL 930x/931x
- 1G/2.5G Access
- 64G/120G
- **VxLAN & SDN**
- **40/28 nm**

mG-Access

RTL933x

RTL 933x
- mG Access
- 640G
- **TSN / EVPN**
- **ES Q2'23**
- **MP Q4'23**
- **22nm**

1G-Access

RTL839x

RTL 839x
- 1G Access
- 28G/52G
- L2+ Smart
- **55nm**

1G-Access

RTL9311BR

RTL 9311BR
- 1G Access
- 64G
- **First Bulit-in ARM**
- **ES Q2'22**
- **22nm**

1G-Access

RTL8370N
RTL8370MB

RTL 8370xx-VC
- 1G Access
- **8G+2SFP**
- **ES Q2'23**
- **MP Q4'23**
- **28nm**

Available | 2022 | 2023 | 2024

Realtek Confidential

© 2021 Realtek Semiconductor Corp. All rights reserved

RTL8373 Unmanaged Switch

- **RTL8373/RTL8372**
  - Integrated 8051 microprocessor
  - Supports SPI Flash/ EEPROM Interface
  - Embedded 4-port 10M/100M/1000M/2.5GBase-T PHY
  - Support two set SERDES interface
    - ➢ SERDES 0 supports UXGMII to connect one 4-port 2.5GBASE-T PHY
    - ➢ SERDS 1 supports USXGMII/10G-R/2500X/1000BASE-X/HSGMII/SGMII to connect PHY transceiver, Fiber OE module or external CPU

NEW Competitive Solution	Port Configuration	
RTL8372 + RTL8221B-VB	5*2.5G + 1*SFP+	
RTL8372 + RTL8221B-VB	5*2.5G + 1*XGT	RTL8261N
RTL8373 + RTL8224	8*2.5G + 1*SFP+	
RTL8373 + RTL8224	8*2.5G + 1*XGT	RTL8261N

2022 Q1 | 2022 Q2 | ES (WORK) 2022 Q3 | MP 2022 Q4

Realtek Confidential

© 2021 Realtek Semiconductor Corp. All rights reserved

RTL8373 Application – 8*2.5G +1*10G(SFP+)

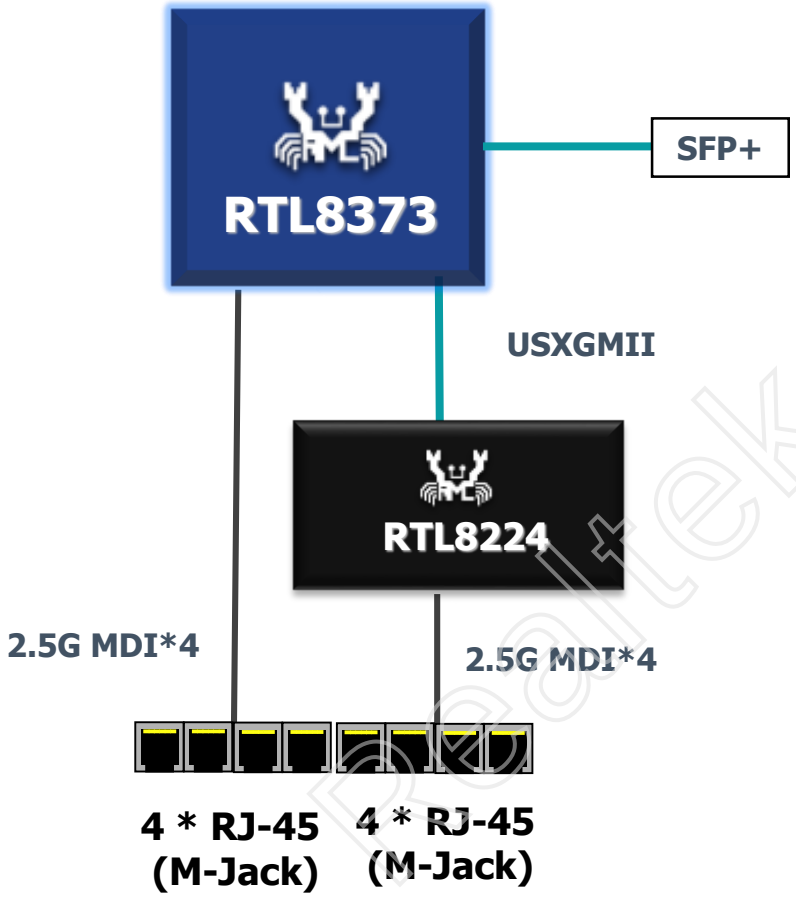

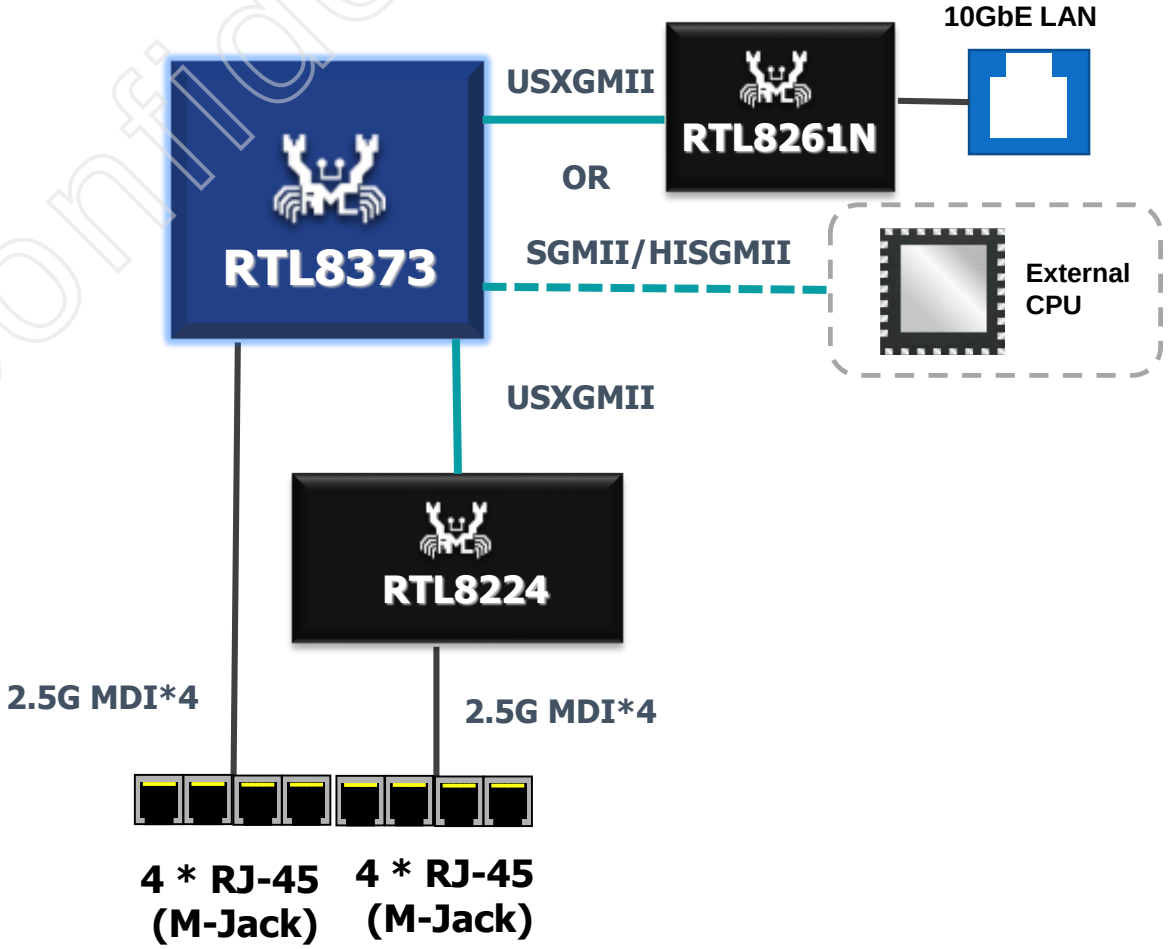

Realtek Confidential

© 2021 Realtek Semiconductor Corp. All rights reserved

RTL9311BR/BM managed Switch

- **RTL9311BR/BM**
  - Bandwidth and I/O:
    - ✓ 24*10/100/1000Base-T + 4 *10G
    - ✓ 48*10/100/1000Base-T + 4*10G
  - Key Feature
    - ✓ Integrated ARM A55
    - ✓ Supports SPI Flash/ DDR3/DDR4/PCIe Interface
  - 15mmX15mm, TFBGA

NEW Competitive Solution	Port Configuration	
RTL9311BR + RTL8218E*3	24G + 4*SFP+	
RTL9311BR + RTL8218E*3	24G + 4*XGT	RTL8261N*4
RTL9311BR*2 + RTL8218E*6	48G + 4*SFP+	
RTL9311BR*2 + RTL8218E*6	48G + 4*XGT	RTL8261N*4

2022 Q1 → 2022 Q2 → ES (2022 Q3) → MP (2022 Q4)

Realtek Confidential

© 2021 Realtek Semiconductor Corp. All rights reserved

RTL9311BR – 24G+4*10G Application

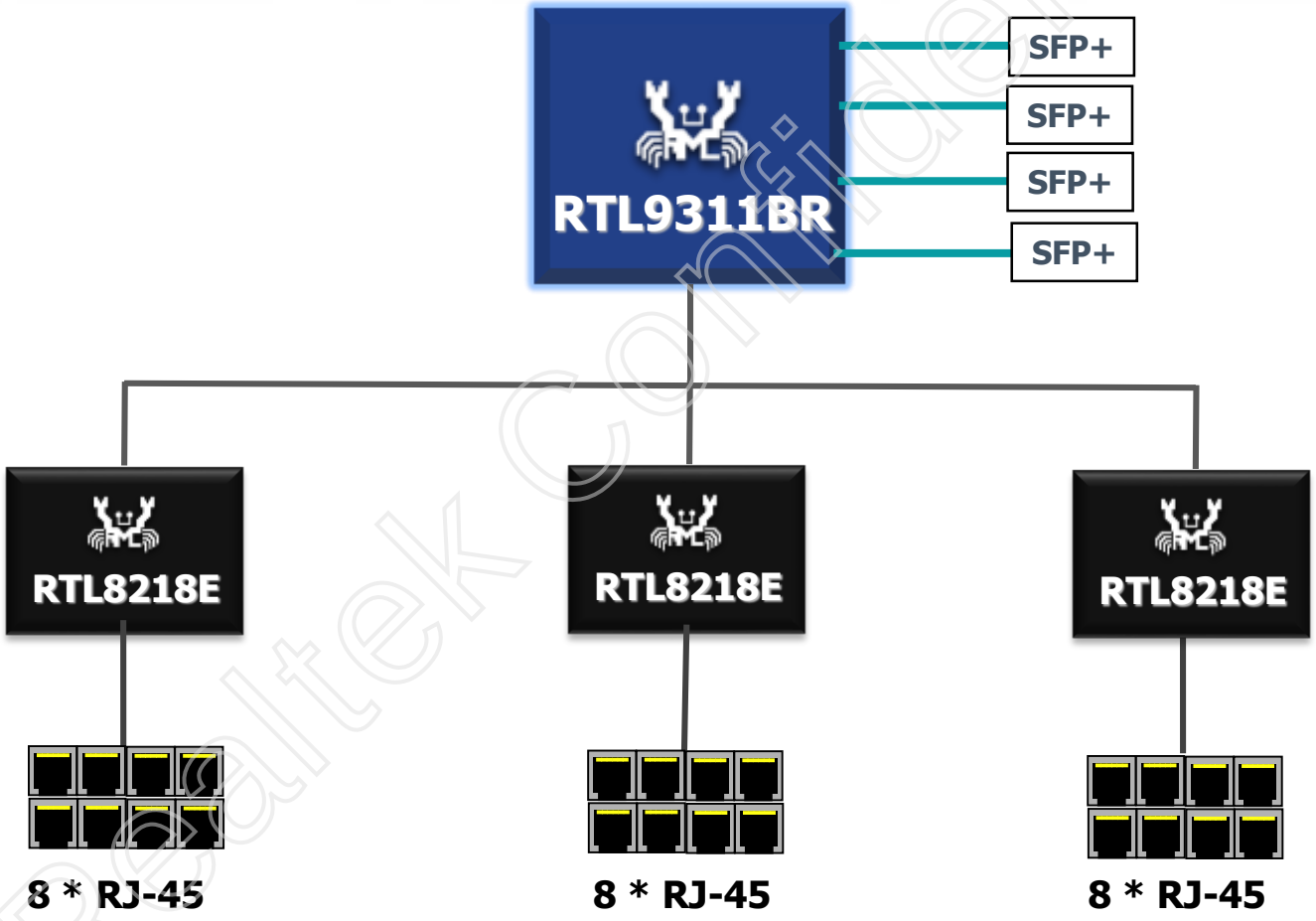

Realtek Confidential

© 2021 Realtek Semiconductor Corp. All rights reserved

RTL9311BR – 48G+4*10G Application

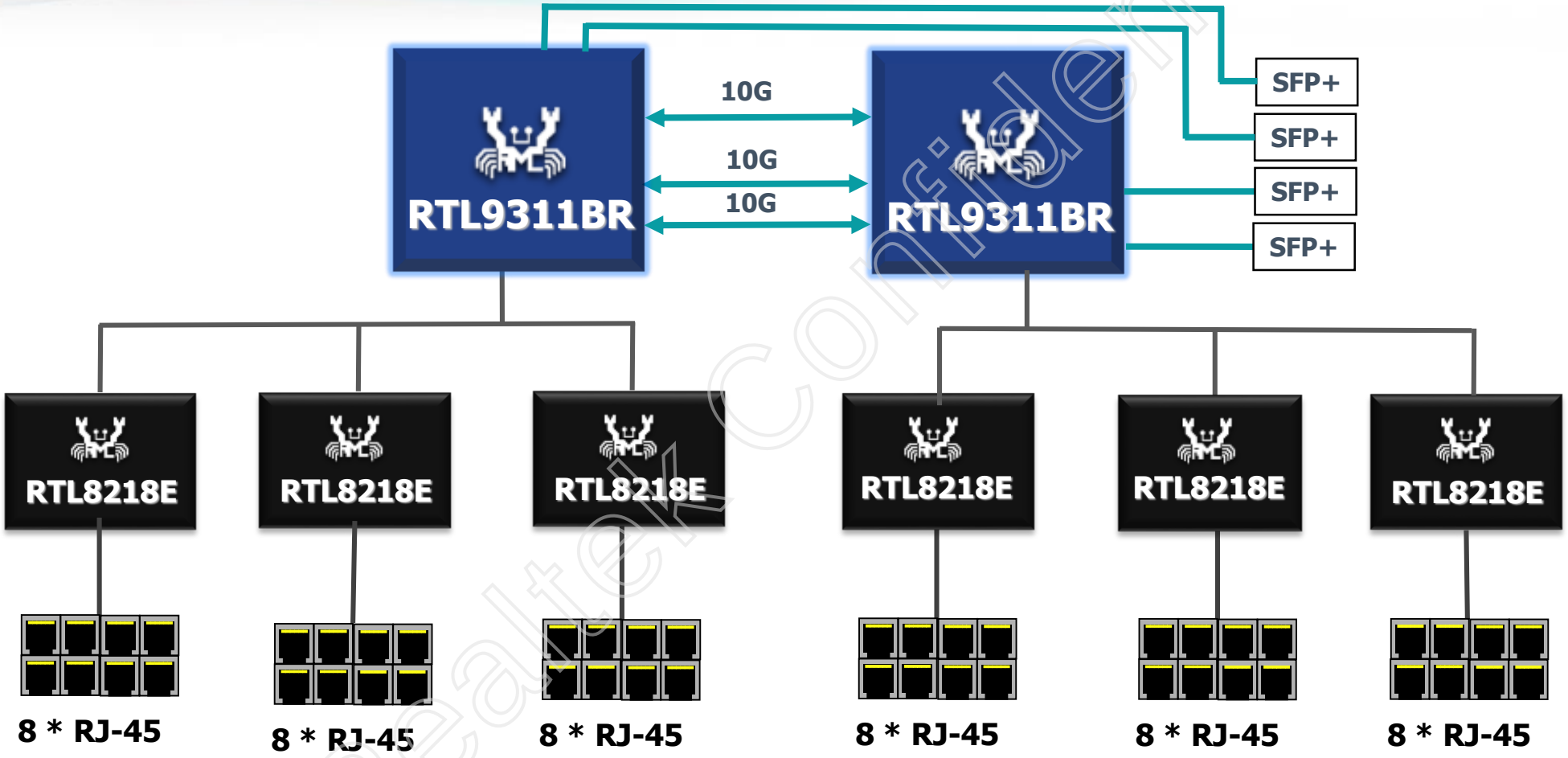

Realtek Confidential

© 2021 Realtek Semiconductor Corp. All rights reserved

Realtek PSE Solution

Realtek Confidential

Realtek PSE Solution

- Switch + PSE Chipset for **Realtek POE Switch Total Solution.**
- Full Coverage of FE/GE/mG Dumb/Smart/Management 5 – 52 ports.
- Low Power, Precise Current Sense, High Reliability.

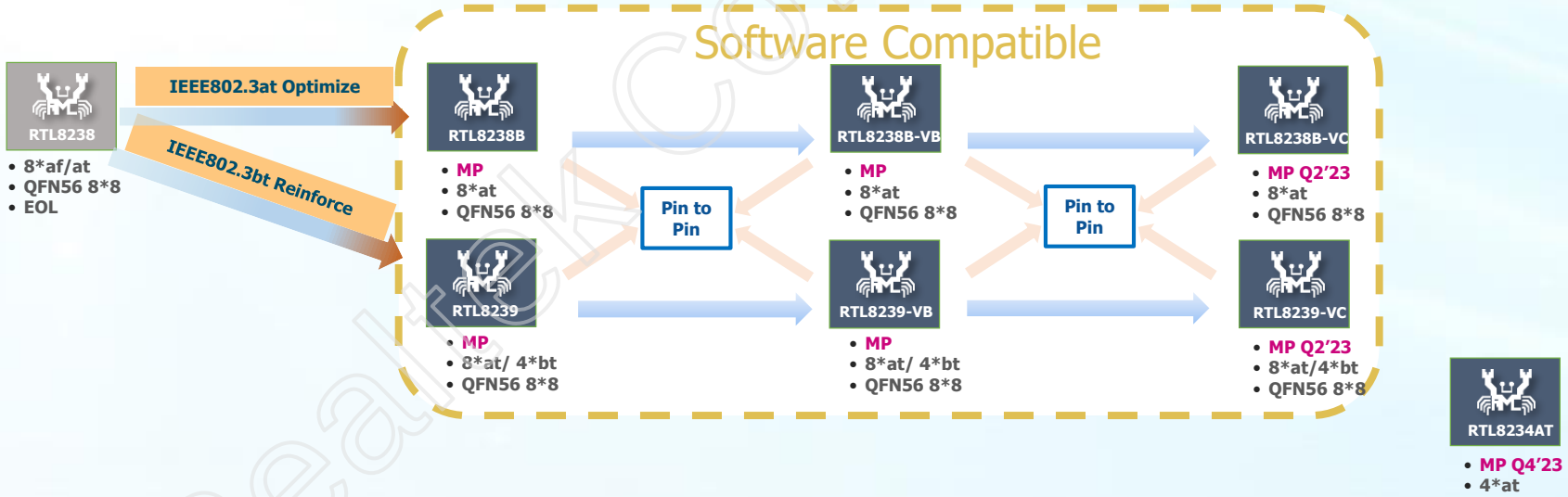

2019	2020	2021	2022	2023

Realtek Confidential

Realtek PSE Selection – at/af

Port Configuration

Dumb POE Switch	8 Port	RTL8238B-VB
	16 Port	RTL8238B-VB*2 + GD32E230G8U6
	24 Port	RTL8238B-VB*3 + GD32E230G8U6
Smart POE Switch	8 Port	RTL8238B-VB
	16 Port	RTL8238B-VB*2 + GD32E230G8U6
	24 Port	RTL8238B-VB*3 + GD32E230G8U6
	48 Port	RTL8238B-VB*6 + GD32E230G8U6

Realtek Confidential

© 2021 Realtek Semiconductor Corp. All rights reserved

Realtek PSE Selection - bt

Port Configuration

Dumb POE Switch	4 Port bt	RTL8239-VB + GD32E230G8U6
	24 Port bt	RTL8239-VB*6 + GD32E230G8U6
	48 Port bt	RTL8239-VB*12 + GD32E230G8U6
Smart POE Switch	4 Port bt	RTL8239-VB + GD32E230G8U6
	16 Port bt	RTL8239-VB*4 + GD32E230G8U6
	24 Port bt	RTL8239-VB*6 + GD32E230G8U6
	48 Port bt	RTL8239-VB*12 + GD32E230G8U6

Realtek confidential

© 2021 Realtek Semiconductor Corp. All rights reserved

Realtek PSE Solution

RTL8238B-VB

- MP
- 8*at
- QFN56 8*8
- Abundant supply

RTL8239-VB

- MP
- 8*at/ 4*bt
- QFN56 8*8
- Abundant supply

Available

8G POE Switch

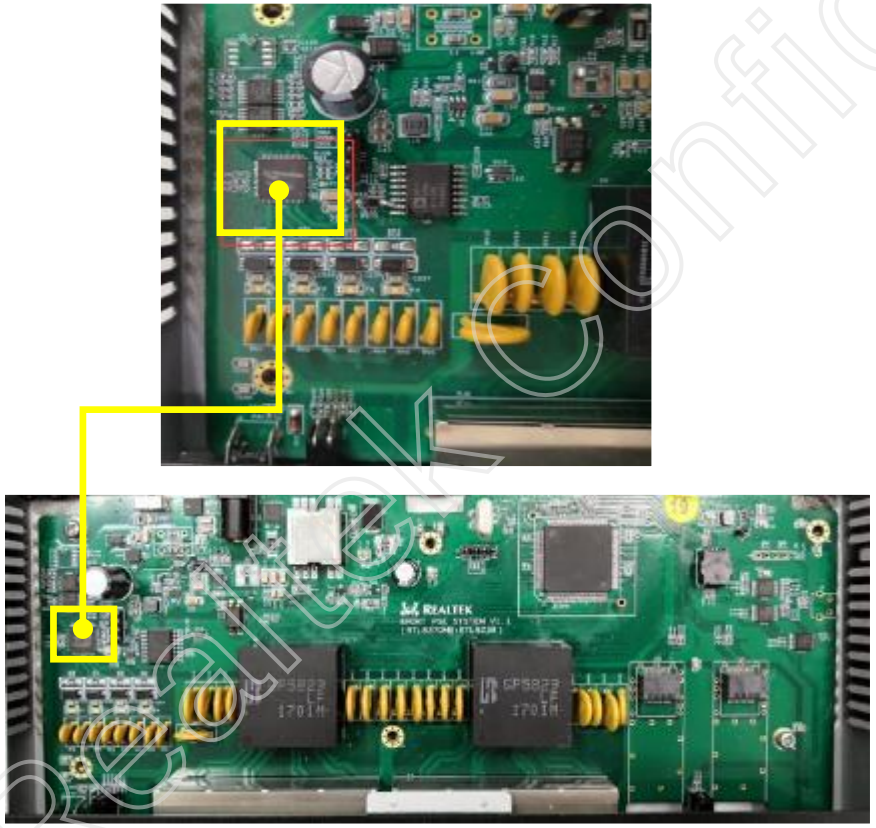

24G POE Switch

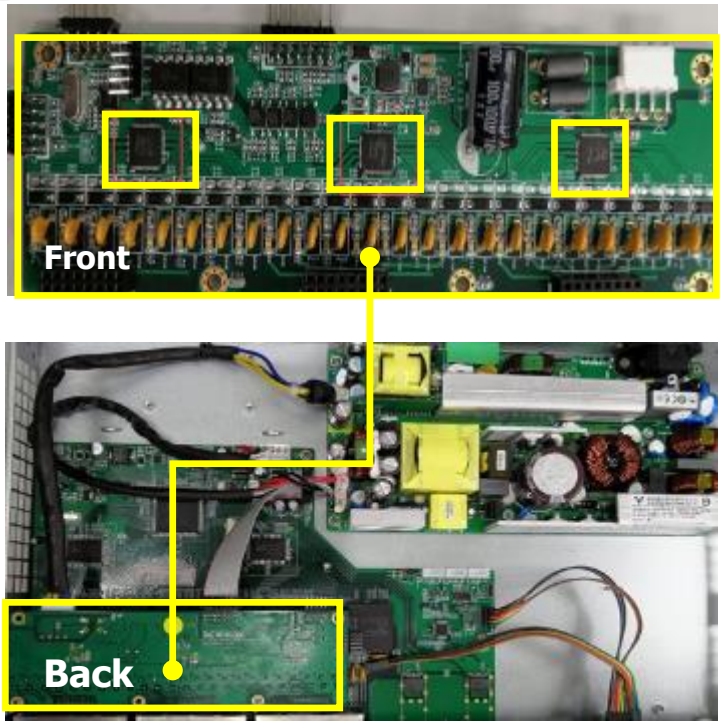

Realtek Confidential

© 2021 Realtek Semiconductor Corp. All rights reserved

Realtek PHY Update

Realtek Confidential

PHY Roadmap

- mG PHY
- 2.5G PHY
- GbE PHY

mG PHY

RTL8261N
- Single 10G PHY
- ES Q3'22
- MP Q4'22
- 22nm

mG PHY

RTL8264B
- Quad 10G PHY
- ES Q1'22
- MP Q2'22
- 22nm

2.5G PHY

RTL8224
- Quad 2.5G PHY
- ES Q3'22
- MP Q4'22
- 22nm

GbE PHY

RTL8214FC
- 4 * GE Combo
- 1G/100M/10M
- 55 nm

GbE PHY

RTL8214QF
- 4 * Fiber
- 1G/100M/10M
- 55 nm

GbE PHY

RTL8218B
- 8 * GE
- 1G/100M/10M
- 55 nm

GbE PHY

RTL8218D
- 8 * GE
- 1G/100M/10M
- 40 nm

GbE PHY

RTL8218E
- 8 * GE
- 1G/100M/10M
- 28 nm

~ 2020 | 2021 | 2022 | 2023

Realtek Confidential

© 2021 Realtek Semiconductor Corp. All rights reserved

RTL8261N Single port 10G PHY

- **RTL8261N**
  - 22nm 10GBASE-T, AQFN, Single port.
  - Block Diagram and Key feature :

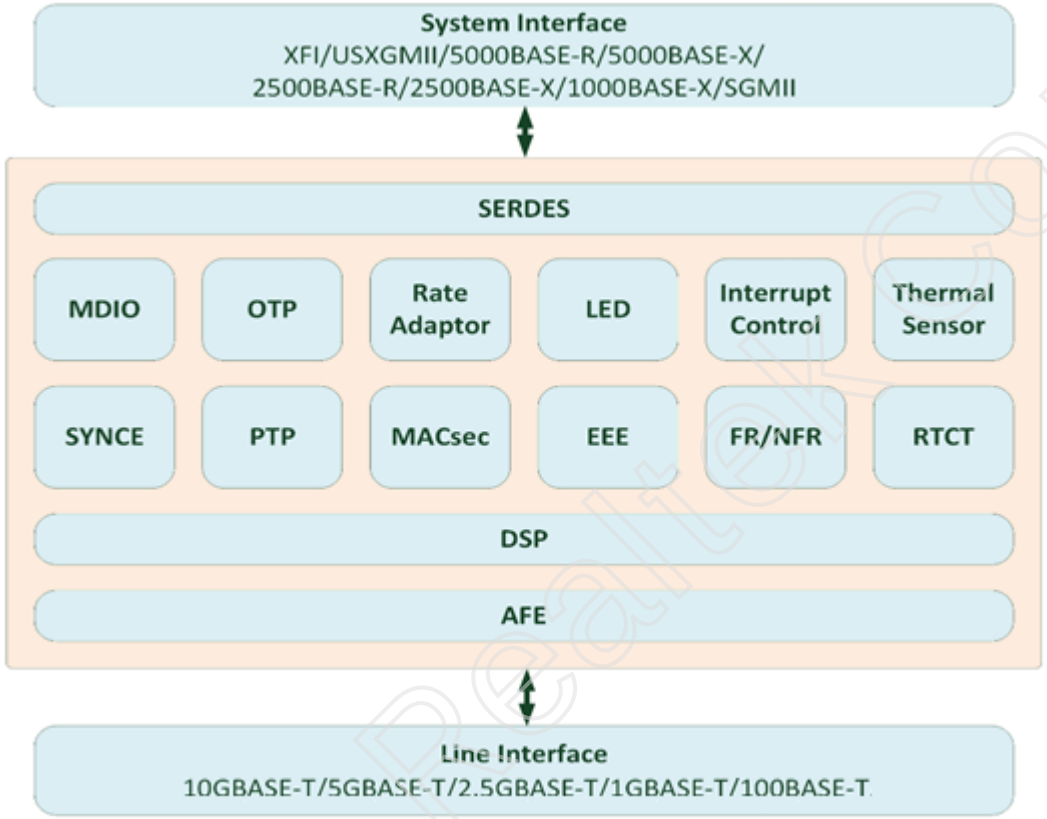

Key Feature

- Five Speeds : 100M/1G/2.5G/5G/10G
- IEEE 802.3bz & NBASE-T Compliant
- 2.5G 200m @ CAT5E F/UTP
- MACsec
- Low Latency
- Energy Efficient Ethernet (EEE)
- PTP & SyncE Support
- Thermal Sensor
- Wake-On-LAN
- Fast Retrain
- Cable Diagnostics

Realtek Confidential

© 2021 Realtek Semiconductor Corp. All rights reserved

RTL8261N QA board (RTL9313+RTL8264B+RTL8261N)

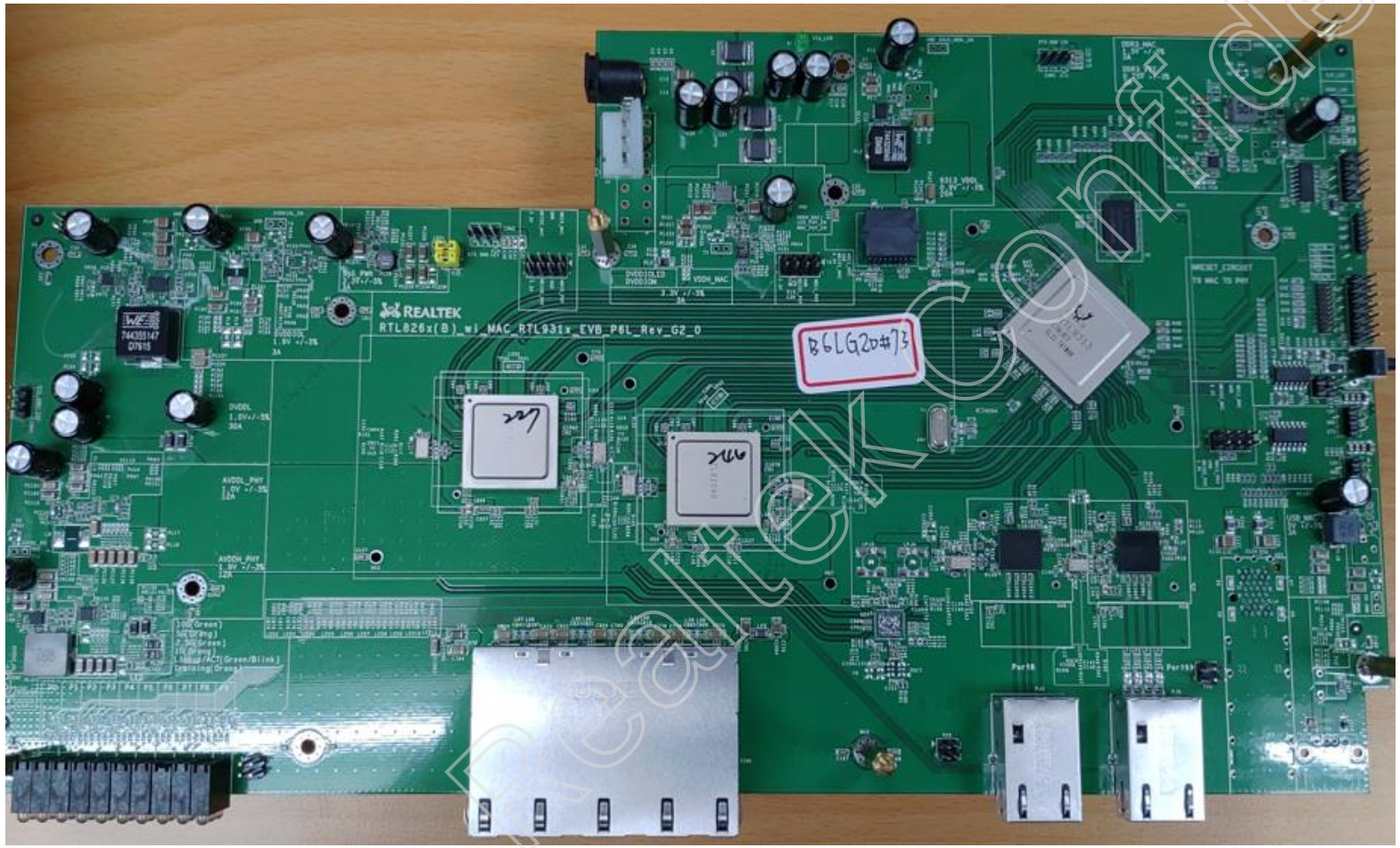

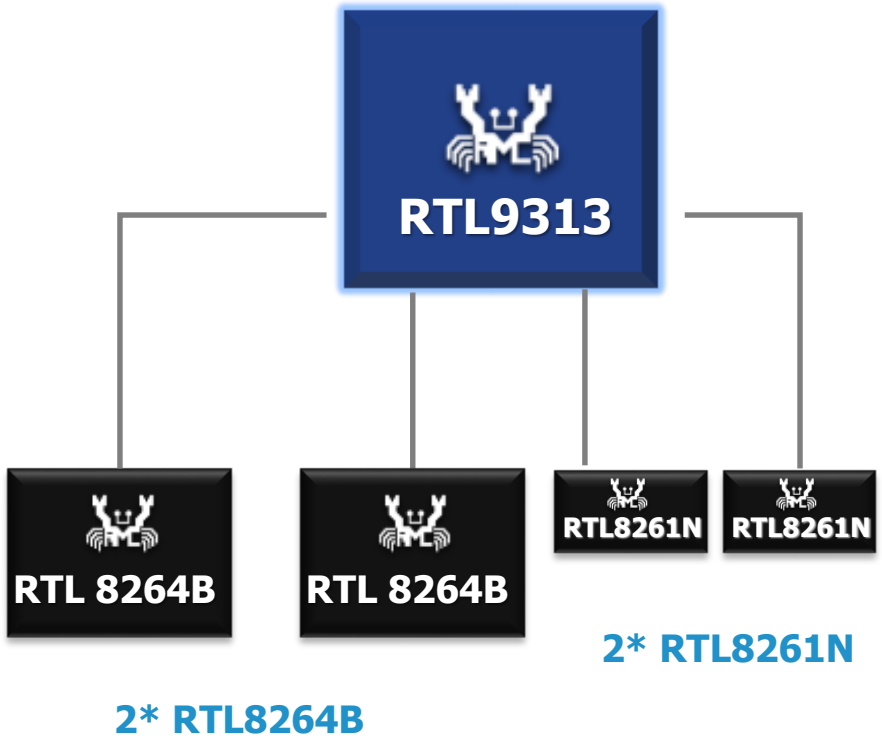

Realtek Confidential

© 2021 Realtek Semiconductor Corp. All rights reserved

RTL8261N QA board (CA8271A+RTL8261N)

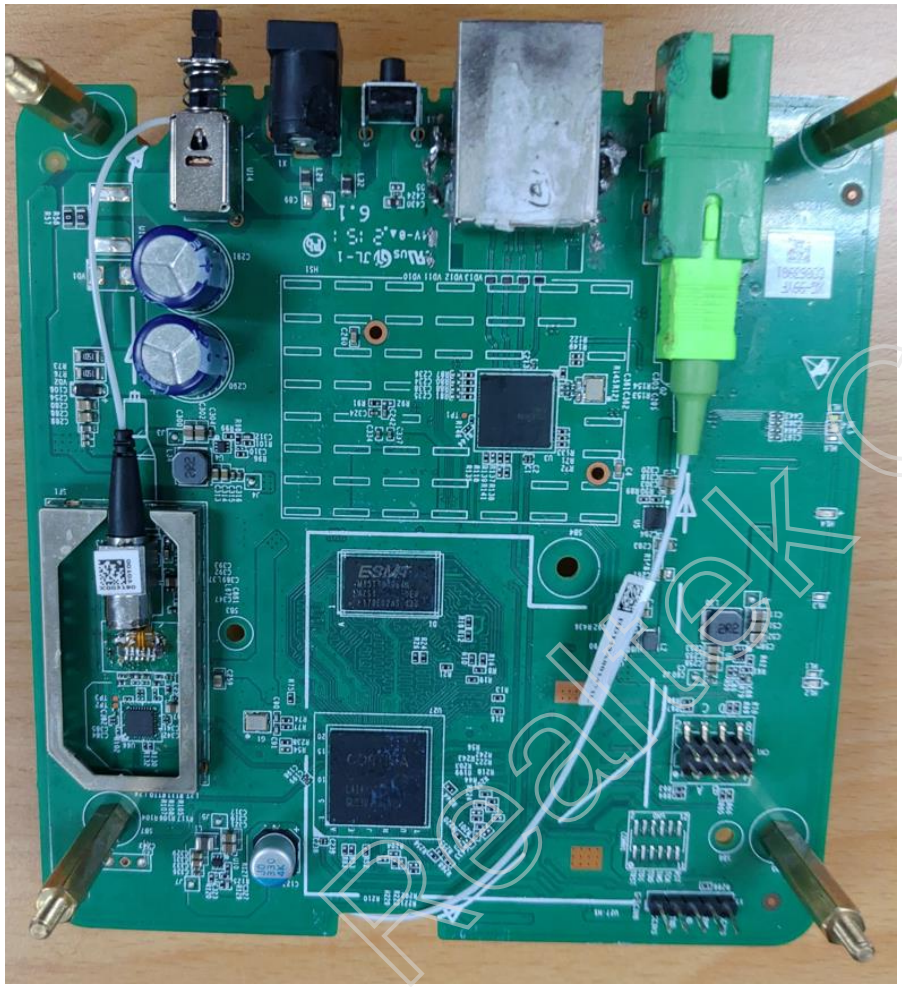

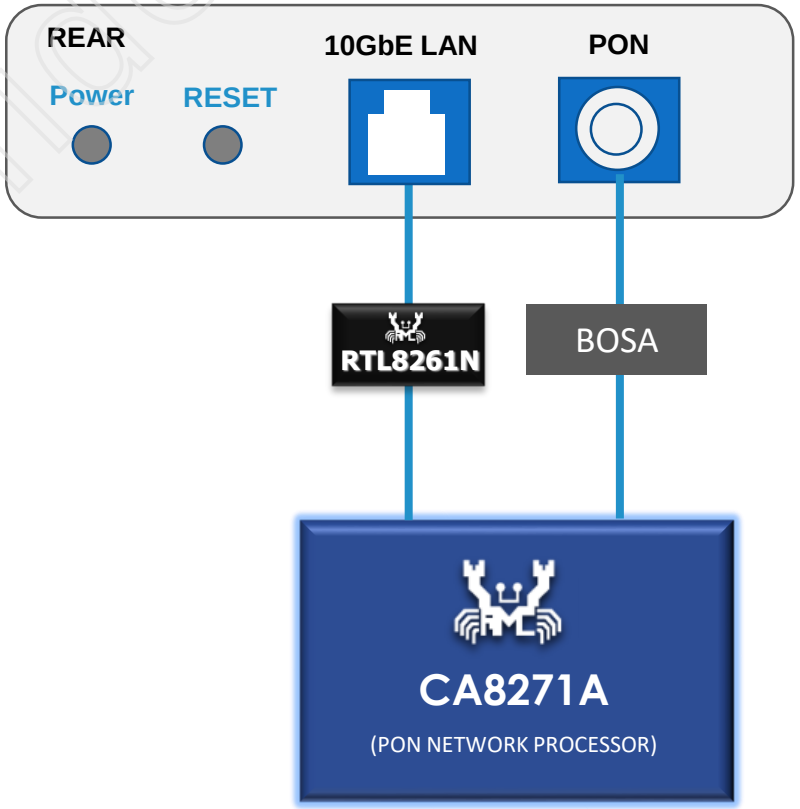

Realtek Confidential

© 2021 Realtek Semiconductor Corp. All rights reserved

New Octal PHY – RTL8218E

RTL8218E VS RTL8218D

Item		RTL8218D	RTL8218E
1	Package	LQFP128	LQFP128
2	Process	40nm	28nm
3	Power Input	3.3V/1.1V	3.3V/0.9V
4	Interface	XSGMII or 2*QSGMII	O-USGMII or XSGMII or 2*QSGMII
5	Power Consumption (typical)	3.38W (QSGMII Mode) 3.23W(XSGMII Mode)	2.31W(QSGMII Mode) 2.36W(XSGMII Mode) 2.36W(O-USGMII Mode)
6	ESD/EMI(CS)	Normal	Enhanced
7	SyncE/1588	Yes	Enhanced
8	RTCT(Cable Diagnostic)	Accuracy: +-20m Not Support Inter-pair short	Accuracy: +-8m Support Inter-pair short
9	Hardware Related	All Pin to Pin Compatible (Except E-PAD) 18D E-pad size:6.55 x 6.55mm 18E E-pad size:5.6 x 5.6mm	
10	Software Related	Initial Code Not Compatible	

Realtek Confidential

© 2021 Realtek Semiconductor Corp. All rights reserved

Realtek Selection Guide

Realtek Confidential

FE+GE Managed Switch Selection Guide

Port Configuration

RTL8330M	8 FE + 2G SFP		
RTL8332M + RTL8208L	16 FE + 2G SFP		
RTL8332M + RTL8208L*2	24 FE +	2G SFP	
		4G SFP	RTL8214QF
		4G Combo	RTL8214FC
RTL8353M + RTL8208L*6	48FE +	4G SFP	RTL8214QF
		4G Combo	RTL8214FC

Realtek Confidential

© 2021 Realtek Semiconductor Corp. All rights reserved

GE Managed Switch Selection Guide

Port Configuration

RTL8380M	8 GE + 2G SFP		
RTL8381M + RTL8214C	12 GE + 2G SFP		
RTL8382M + RTL8218B	16 GE + 2G SFP		
RTL8382M + RTL8218D*2	24 GE +	2G SFP	
		4G SFP	RTL8214QF
		4G Combo	RTL8214FC
RTL8391M + RTL8214QF*6	24G SFP + 4G Combo		RTL8214FC
RTL8393M + RTL8218D*6	48GE +	4G SFP	RTL8214QF
		4G Combo	RTL8214FC
RTL8393M + RTL8214QF*12	48G SFP + 4G Combo		RTL8214FC

Realtek Confidential

© 2021 Realtek Semiconductor Corp. All rights reserved

10G Uplink Managed Switch Selection Guide

Port Configuration

■ Lite L3 Managed Switch

RTL9301 + 3*RTL8218D(E)	24GE + 4SFP+	
	24GE + 2XGT + 2 SFP+	RTL8261N*2
	24GE + 4XGT	RTL8261N*4
RTL9301 + 6*RTL8214QF	24SFP + 4SFP+	
RTL9303	8SFP+	

■ Full L3 Managed Switch

RTL9311BR + 3*RTL8218D(E)	24GE + 4SFP+	
RTL9311 + 6*RTL8218D(E)	48GE + 6SFP+	
	48GE + 4SFP+ +2XGT	RTL8261N*2
RTL9311 + 12*RTL8214QF	48SFP + 6SFP+	
RTL9313	12SFP+	

Realtek Confidential

© 2021 Realtek Semiconductor Corp. All rights reserved

GE Unmanaged Switch Selection Guide

	Port Configuration	
RTL8367N-VB	5 GE	
RTL8367S	5 GE + 1G SFP	
RTL8370N-VB	8 GE	
RTL8370MB	8 GE + 2G SFP	
RTL8370MB	8 GE + 2G	2 * RTL8211F
RTL8382L + RTL8218B	16 GE + 2G SFP	
RTL8382L + 2*RTL8218B	24 GE + 2G SFP	
RTL8382L + 4*RTL8214QF	8 GE+ 18G SFP	

Realtek Confidential

© 2021 Realtek Semiconductor Corp. All rights reserved

FE Unmanaged Switch Selection Guide

	Port Configuration	
RTL8310B	8 FE + 1 GE + 1G SFP	
RTL8326B + 2*RTL8208L	24 FE + 1 GE + 1GE SFP	
RTL8326B + 2*RTL8208L	24 FE + 2G Combo	RTL8211F
RTL8305NB	5 FE	
RTL8309N	8 FE	
RTL8309M	8 FE + 1 FE	RTL8201F
RTL8316E	16 FE	
RTL8324E + RTL8208D-VB	24 FE	
RTL8332L + 2*RTL8208L	24 FE + 4G Combo	RTL8214FC-VC

Realtek Confidential

© 2021 Realtek Semiconductor Corp. All rights reserved

FE Industrial Switch Selection Guide

■ unManaged Switch

	Port Configuration
RTL8304MBI	3 FE + 1 RMII
RTL8305NBI	5 FE
RTL8309NI	8 FE
RTL8316SI	16 FE

■ Managed Switch

	Port Configuration
RTL8332MI+RTL8214FCI	8 FE + 4G Combo
RTL8332MI+RTL8208LI	16 FE + 2G SFP
RTL8332MI+2*RTL8208LI	24 FE + 2G SFP
RTL8332MI+2*RTL8208LI+RTL8214FCI	24 FE + 4G Combo

Realtek Confidential

© 2021 Realtek Semiconductor Corp. All rights reserved

GE/mGE Industrial Switch Selection Guide

■ unManaged Switch

	Port Configuration
RTL8364NBI-VB	2 GE + 2 RGMII/1 GMII/1HISGMII
RTL8367RBI	5 GE + 2 RGMII
RTL8367NI-VB-CG	5 GE
RTL8367SBI	5 GE + 1RGMII + 1SFP
RTL8370NI-VB-CG	8 GE
RTL8370MBI	8 GE + 2 RGMII/ SFP
RTL8371BI	8 2.5G

NEW Competitive Solution will be ready at 2022 Q4

Realtek Confidential

© 2021 Realtek Semiconductor Corp. All rights reserved

GE Industrial Switch Selection Guide

■ Managed Switch

	Port Configuration
RTL8380MI	8 GE + 2G SFP
RTL8382MI + RTL8214FCI	8 GE + 4G Combo
RTL8382MI+RTL8218DI	16 GE + 2G SFP
RTL8382MI+2*RTL8218DI	24 GE + 2G SFP
RTL8382MI+2*RTL8218BI+RTL8214FCI	24 GE + 4G Combo
RTL8391MI+3*RTL8218BI+RTL8214FCI	24 GE + 4G Combo
RTL8391MI+7*RTL8214FCI	28G SFP
RTL9311RI+3*RTL8218DI	24 GE + 4 SFP+
RTL9313I	12 * 10 SFP+

Realtek Confidential

© 2021 Realtek Semiconductor Corp. All rights reserved

Realtek mGE Solution

Realtek Confidential

mGE Unmanaged Switch Selection Guide

NEW Competitive Solution	Port Configuration	
RTL8372 + RTL8221B-VB	5*2.5G + 1*SFP+	
RTL8372 + RTL8221B-VB	5*2.5G + 1*XGT	RTL8261N
RTL8373 + RTL8224	8*2.5G + 1*SFP+	
RTL8373 + RTL8224	8*2.5G + 1*XGT	RTL8261N

Realtek Confidential

© 2021 Realtek Semiconductor Corp. All rights reserved

mG Managed Switch Selection Guide

Port Configuration

RTL9302B + RTL8218D	16GE+8*2.5GT + 2*XGT+2*SFP+	RTL8224*2 + RTL8261N *2
RTL9302C	16*2.5GT + 2*XGT + 2*SFP+	RTL8224*4 + RTL8261N*2
RTL9313	24*2.5GT + 6*SFP+	
	24*2.5GT + 2*XGT + 2*SFP+	RTL8224*6 + RTL8261N*2
	24*2.5GT + 2*XGT + 4*SFP+	
RTL9302B	8*2.5GT	RTL8224*2
RTL9313	12*2.5GT	RTL8224*3
RTL9303	8*XGT	RTL8261N*8
RTL9313	12*XGT	RTL8261N*12

Realtek Confidential

© 2021 Realtek Semiconductor Corp. All rights reserved

Thank You!

Realtek is committed to providing its customers with the best possible connectivity and multimedia solutions

Realtek Confidential

© 2021 Realtek Semiconductor Corp. All rights reserved